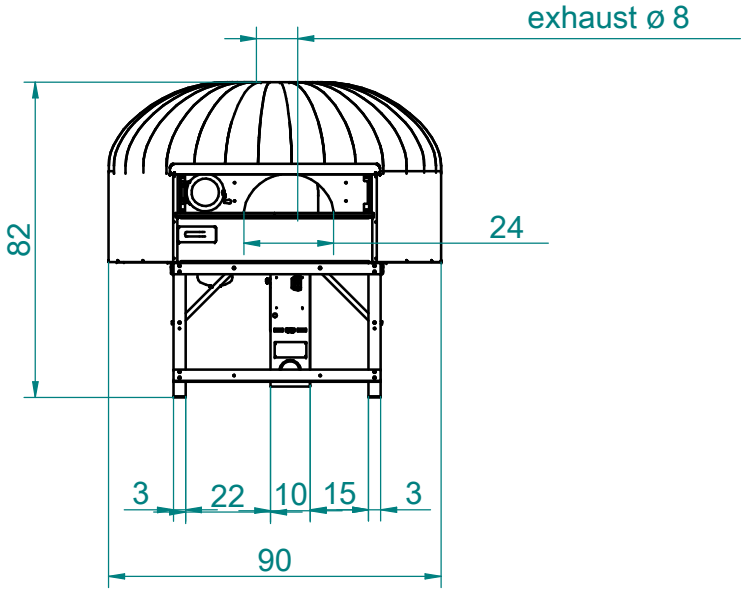

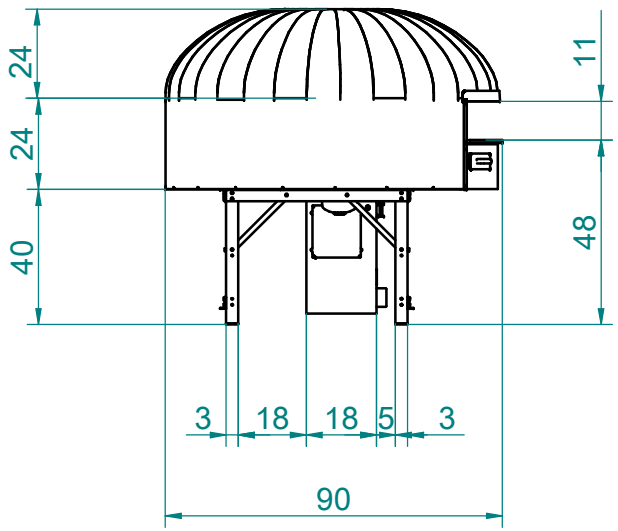

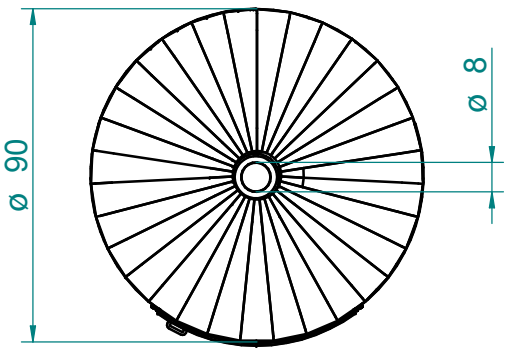

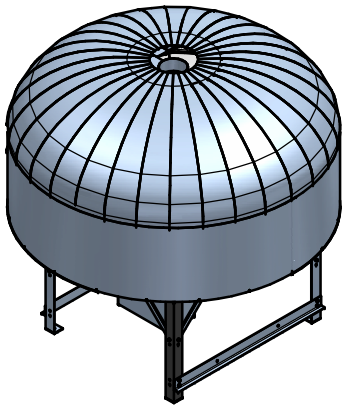

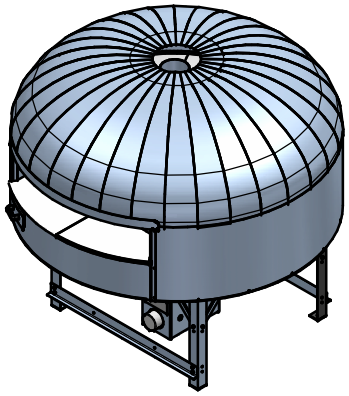

			Weight: **4.132 lbs**
	Unit:	INCH	Item:
MADE IN ITALY Marana® FORNI	Scale	1:25	**Oven TTT - 150 LT DOME**
			Design: **NAPOLI DOME**